care toilet seats

ESPECIALLY DESIGNED FOR ACCESSIBLE APPLICATIONS

SUPERIOR STRENGTH AND DESIGN

UNIQUE BUFFERS WHICH ENHANCE LATERAL STABILITY

RESISTANT TO SCRATCHES AND BURNS

COLOUR CONTRAST OPTIONS

ENWARE
AUSTRALIA PTY LIMITED

WWW.ENWARE.COM.AU

Pressalit Care

OUR TOILET SEATS ARE ULTRA-STRONG AND PROVIDE TWO SEAT PROFILE DESIGNS, BASED ON ERGONOMICS, TO MEET THE DIFFERENT REQUIREMENTS AND ABILITIES OF INDIVIDUAL USERS.

Each Pressalit Care toilet seat provides a superior level of independence, safety and comfort by incorporating features that have been developed and refined over many years.

- Easy to clean high density Duroplast construction – Scratch and burn resistant, providing added protection against bacterial cross contamination
- Strong stainless steel hinges with hygienic design profiles
- Unique stability buffers that provide increased seat strength by reducing the pressure on the hinges, making the seat safer, particularly during wheelchair transfers and heavy use
- Certification to a maximum weight capacity of 250 kg or 150 kg for raised height seats
- 3 year guarantee

IMPROVE SAFETY WITH COLOUR CONTRASTS

The creative use of colours in products such as toilet seats, is an easily adaptive solution that brings constructive assistance to people with dementia and improves safety for the visually impaired.

Having a bathroom that allows an individual greater independence in personal hygiene and toileting helps heighten a person's self-esteem and confidence.

AS 1428.1-2009 AMDT 1-2010 COMPLIANT COLOURS

New accessible sanitary facilities must have a toilet seat with a minimum luminance contrast of 30% with the background as documented in AS 1428.1- 2009 Amdt 1-2010.

Our colour options in the Dania toilet seat range, such as blue, red and grey, provide a compliant solution, when used with our IFO toilet and meet the appropriate needs detailed in AS 1428.1-2009 Amdt 1-2010.

Pressalit Care offers 4 colours to choose from:

- White
- Blue - compliant when used on IFO toilet
- Red - compliant when used on IFO toilet
- Anthracite Grey - compliant when used on IFO toilet

TOILET SEATS

DANIA

With an ergonomically designed profile which is compatible with all toilet pans and suited to most users. This flat shaped seat enables easier sideways transfer by wheelchair users. Its contoured lid is comfortable to sit on, and acts as a backrest when upright.

BENEFITS

- Ergonomic design that is well suited to most users
- Appropriate for users who undertake wheelchair transfers
- Contoured lid gives good support to the back
- Colour option aids visual impairment
- Optional top mount "Leda" stainless steel hinges
- Institutional "heavy duty" stainless steel hinges
- Option for seat and lid, or seat only combination
- 250 kg maximum weight
- 3 years guarantee

USER TYPES

- Child over 6 with a disability
- Adult with a disability (incl. the elderly)

APPLICATIONS

- Public Buildings, Aged Care, Retirement Living, Health Care, Education, Residential

COLOURS

- White, Blue, Anthracite Grey, Red (Red order codes on request)

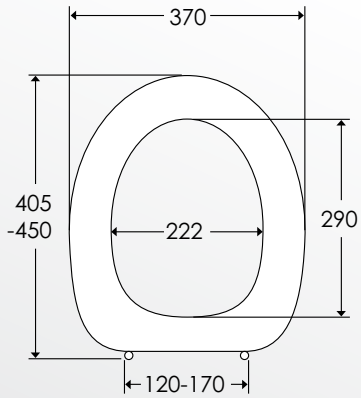

Order Code:

White:	Blue:	Anthracite Grey:	
EP-R27000B84	EP-R27108B84	EP-R27112B84	- Dania single flap (seat only) with Institutional hinges
EP-R27000B90	EP-R27108B90	EP-R27112B90	- Dania single flap (seat only) with Top Mounted hinges
EP-R37000B84	EP-R37108B84	EP-R37112B84	- Dania double flap (with lid) with Institutional hinges
EP-R37000B90	EP-R37108B90	EP-R37112B90	- Dania double flap (with lid) with Top Mounted hinges

DANIA – 50MM RAISED HEIGHT*

Certain disabilities present people with difficulty in sitting down and standing up from a normal height toilet.

This raised Dania seat makes it easier for people to stand up or sit on the toilet, it can also help to alleviate transfer issues from a wheelchair, and is an economical method of converting standard height pans to meet disabled requirements.

Seat can be securely fixed to any toilet pan that allows external hinge access.

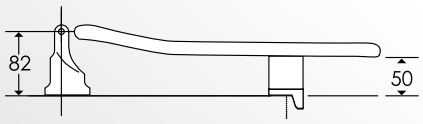

Order Code:

EP-R23000 - Dania 50mm Raised Height White - Single flap (seat only)

EP-R33000 - Dania 50mm Raised Height White - Double flap (with Lid)

ERGOSIT*

A wide seat which offers hand support and is particularly suitable for larger people.

The seat's form, offers assistance with bowel movement through a surface that stimulates nerves and thigh muscles.

Integral grooves at the rear of the seat also prevent skin adhesion.

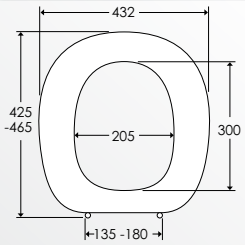

Order Code:

EP-R29000B84 - Ergosit White - Single flap (seat only) with Institutional hinges

EP-R30000B84 - Ergosit White - Single flap (with lid) with Institutional hinges

*Not suitable for wall hung or wall faced pans.

HINGES

INSTITUTIONAL HINGES

To maximise seat stability, this hygienic stainless steel hinge design is mounted with a crossbar to give extra strength in areas of heavy use. Can be securely fixed to any toilet pan that allows external hinge access. The B84 is highly recommended for public use applications.

Order Code:

EP-B84999 - Institutional Hinge

Suitable for use with IFO98125 - IFO support arms system

TOP MOUNTED (LEDA) HINGES

When using the Dania toilet seat with wall faced or wall-hung pans, this hinge must be used. The B90 is ideal for most concealed toilet pan including the Leda range, and allows seats to be installed, without removing the plural pans to access the seat hinges/fittings.

Order Code:

EP-B90999 - Top mounted hinge (for wall faced or wall hung pans)

ALSO AVAILABLE FROM ENWARE

IFO BASINS

All basins are fully glazed under and over preventing bacteria growth. They feature:

- Reverse shaped wash bowl for increased vanity area
- Back to wall lip for protection

IFO SIGN BASIN 600

Order Code:

IFO7362 - 1 x Taphole 1 x Overflow

IFO SIGN BASIN COMPACT 770

Order Code:

IFO7752 - Left bowl 1 x Taphole 1 x Overflow

IFO7762 - Right bowl 1 x Taphole 1 x Overflow

IFO SIGN BASIN 600

IFO SIGN BASIN COMPACT 770

IFO SUPPORT ARMS

- Sturdy and rust resistant aluminium armrests complete with toilet paper holder and a mounting kit for IFO increased height WCs
- Arms are easy to mount onto IFO WC with hard seat only
- Arms can be retro-fitted to IFO toilets IFO6861, IFO6872, IFO6893
- Arms individually raise up and back for full access
- System load tested for 150 kg
- Offers the opportunity to build in a call button into the left or right handle

Order Code:

IFO98125 - Support arms including adjustable toilet roll holder

Can only be used on IFO toilet pans

IFO SIGN ACCESSIBLE TOILET KIT – AS 1428.1-2009

Designed to cater for both user and carer

- IFO freestanding increased height toilet
- Dania grey toilet seat - no lid
- Raised dual flush button

WaterMark Certified

Order Code:

CARE6861 - S Trap

CARE6872 - P Trap

TOILET ONLY:

IFO6861 - S Trap

IFO6872 - P Trap

PRESSALIT SUPPORT ARMS *

- Can be mounted easily and quickly on the toilet
- The moulded handles are comfortable for hands and arms
- The support arms can be folded individually
- Maximum weight: 140kg with both arms

Order Code:

EP-R1170 - Support arms with Dania toilet seat

EP-R1171 - Support arms without toilet seat

** Cannot replace wall mounted support arms. Residential use only.*

NOTE: Measurements are in (mm). All measurements are provided as a guideline, whilst all care has been taken some measurements may vary slightly. Enware reserves the right to alter product specifications without notice.

SPECIALIST PLUMBING SOLUTIONS | ADAPTABLE WORK & LIVING SOLUTIONS | ENVIRONMENTAL, HEALTH & SAFETY SOLUTIONS | STAINLESS STEEL WASHROOM SYSTEMS

caredesign specialist interiors

ENWARE AUSTRALIA PTY LIMITED

ADDRESS: 9 Endeavour Road
Caringbah NSW 2229 Australia
POSTAL ADDRESS: P.O. Box 2129
Taren Point NSW 2229 Australia
PHONE: 61 2 8536 4000
FAX: 61 2 8556 4055

1300 369 273 (AUS) WWW.ENWARE.COM.AU/CAREDESIGN INFO@CAREDESIGN.COM.AU

Quality System Quality Endorsed Company

ENW317 AUG12