Spare Parts: Spring Action Service Kit - Post 1997

Spare Part Spring Action Service Kit - Current Kit (Ball Bearing) Suits Products Post 1997

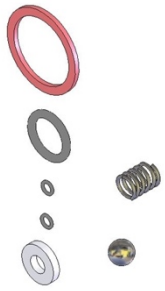

PRODUCT CODE

BUB289	SERVICE KIT- SPRING ACTION CAM/LEVER

Due to ongoing Research and Development, specifications may change without notice.
Component specifications may change on some export models.
Refer to warranty statement for warranty details - www.enware.com.au/warranty.

TECHNICAL DATA

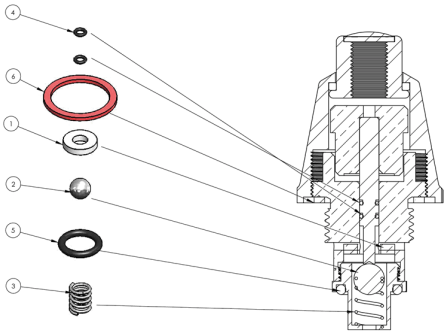

SPARE PARTS

BUB289	Spare Parts: Spring Action Service Kit - Post 1997