Thermal Relief Valve

KEY FEATURES

- Helps prevent over temperature of systems
- Stainless steel body, fittings, spring, and plug
- Discharges the minimum amount of water required to keep water temperature within pre-set limits
- Robust and corrosion resistant
- Compact, low-mass - fast response
- Opens when valve senses fluid temperature, not ambient temperature (when valve is installed in the reverse direction)
- Ram-type plug for reliable and tight shut-off
- Unaffected by pressure variations
- Easy installation
- Installs in any orientation
- Self-actuating - no air or electricity required



PRODUCT CODES

EAATRV	Thermal Relief Valve
EAATRV-RETROKIT	TRV Retrofit Kit for Shower
EAATRV-RETROKITX	TRV Retrofit Kit for Shower without Valve
EAATRV-FE	TRV Retrofit Kit for Eye & Eye/Face Wash

Due to ongoing Research and Development, specifications may change without notice.
Component specifications may change on some export models.
Refer to warranty statement for warranty details - www.enware.com.au/warranty.

Version 18 November 2026

Thermal Relief Valve

TECHNICAL DATA

Inlet / Outlet Connection	1/2" (NPTF) female with 1/2" (NPT) nipple
Size	33 (D) x 114 (L) mm
Weight	0.41kg
Port Size	C
Valve Flow Coefficient (C_v)	1.3
Maximum Operating Pressure	1370 kPa
Maximum Operating Temperature	121°C

1. Close/Open temperatures: 35-41°C, opens gradually at 35°C, fully open at 41°C and remains open until water temperature is 35°C or below. Closing temperature is typically 6°C below full open temperature.

2. Seal material compatibility: EPDM - air (to 148.8°C), water, steam, ketones, and synthetic hydraulic oils.

3. A #20 mesh strainer is recommended for use with all port sizes (not supplied).

4. With the valve installed in the standard flow direction, thermal actuator will respond to ambient temperature changes to initiate flow, then respond to water temperature once flow is established.
With the valve installed in the reverse flow direction, thermal actuator will respond to water temperature only.

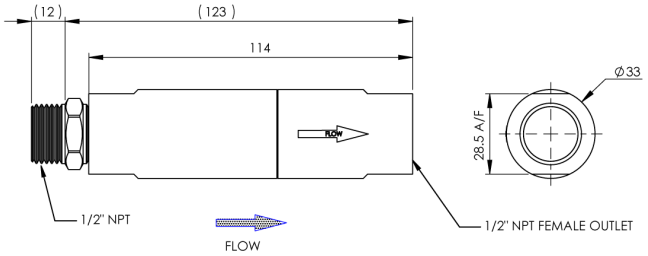

OPTIONAL ACCESSORIES

ESS100	Thermal Reflective Insulation

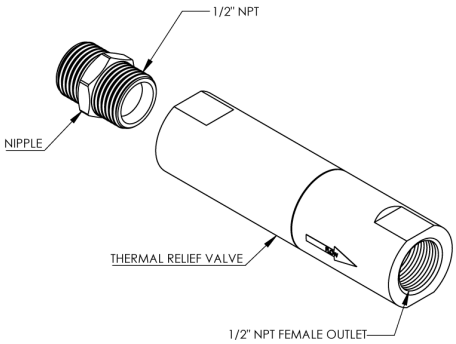

EAATRV

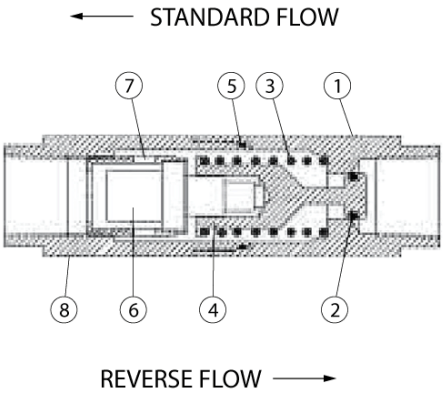

ITEM	DESCRIPTION	MATERIAL
1	Body - Inlet Half	Stainless steel 316L dual grade 316/316L
2	Seat Seal	PTFE
3	Operating Spring	Stainless steel 302
4	Ram-Type Plug	Stainless steel 303
5	Body Seal	EPDM / Viton
6	Thermal Actuator	Stainless steel 303
7	Actuator Carrier	Stainless steel 303
8	Body-Outlet Half	Stainless steel 316L dual grade 316/316L

Thermal Relief Valve

EAATRV



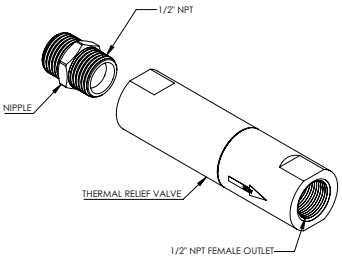

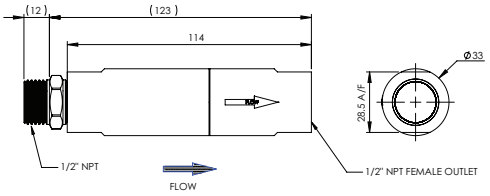

EAATRV-RETROKIT

Thermal Relief Valve with Tee fitting suitable for installing onto the inlet of emergency shower. Thermal Relief Valve is supplied loose.



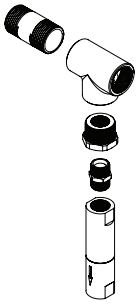

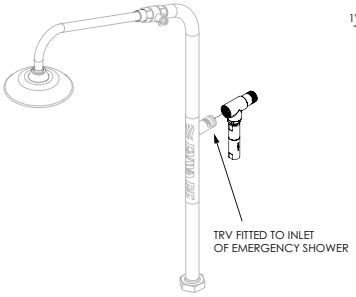

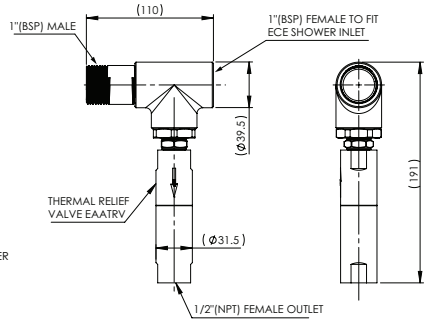

EAATRV-RETROKITX

Tee fitting suitable for installing Thermal Relief Valve onto the inlet of emergency shower. Tee fitting only, valve not included.



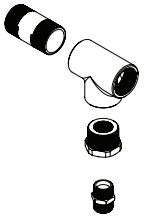

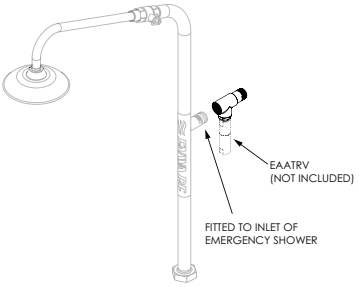

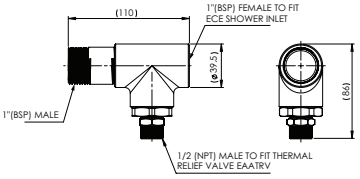

EAATRV-FE

Kit with 1/2" tee and nipples supplied loose with Thermal Relief valve. Suitable for fitting onto eye washes and eye/ face washes.



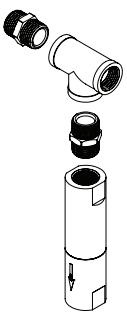

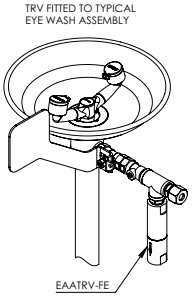

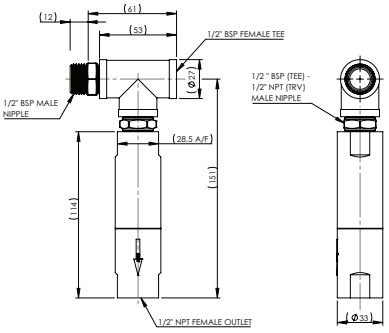

Version 21 November 2025