Touch-Free Wall Sensor Tap - In-Wall - 3V Battery

Touch-free sensor tap for hygienic hand washing in healthcare, food service and other high-use environments. Sensor activation helps minimise cross-contamination while providing convenient, hands-free operation.



KEY FEATURES

- Compatible with ENMA and ENMW series touch-free sensor taps.
- Low-voltage 3V battery operation eliminates the need for mains power.
- IP67-rated electrical connections for reliable performance in wet environments.
- Smartflow Monitoring System compatible for TMV monitoring and compliance reporting.
- In-wall and front-of-wall components can be supplied separately to simplify staged construction and installation.

Note: Requires Front-of-Wall component

PRODUCT CODE

ENM620L	Touch-Free Wall Sensor Tap - In-Wall - 3V Battery

Lead Free
AS3718
WMKA1583

SMART FLOW ENABLED
Water Monitoring and Data Capture

1300 369 273 | info@enware.com.au | enware.com.au

ENWARE
A WATTS Brand

Touch-Free Wall Sensor Tap - In-Wall - 3V Battery

TECHNICAL DATA

Inlet Connection	1/2" BSP (15mm)
Recommended Pressure	Min 50kPa Max 500kPa
Maximum Static Pressure	1000kPa
Maximum Water Temperature	70°C
Sensor Power Supply	3V Lithium (AA 1.5V x 2) Battery life guide: 4 ± 1 years

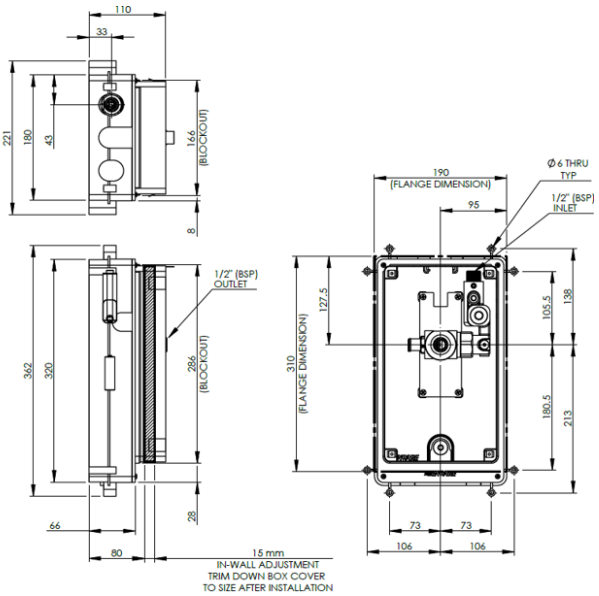

FRONT-OF-WALL COMPONENT OPTIONS

ENMW-205	Touch-Free Wall Sensor Tap - Wave On/Off - Front of Wall - 200mm Spout
ENMW-250	Touch-Free Wall Sensor Tap - Wave On/Off - Front of Wall - 230mm Spout
ENMA-205	Touch-Free Wall Sensor Tap - Active Sense - Front of Wall - 200mm Spout
ENMA-250	Touch-Free Wall Sensor Tap - Active Sense - Front of Wall - 230mm Spout
ENMW-CNBSN	Touch-Free Wall Sensor Lead Free Tap - On Demand Front of Wall Component with Custodian Basin Outlet

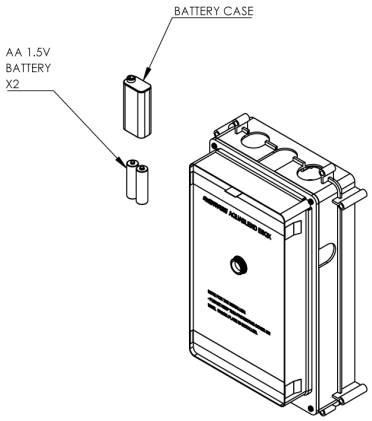

Products are to be installed in accordance with the Plumbing Code of Australia and AS/NZS3500.
Reference should also be made to the Australasian Health Facility Guidelines (AHFG), ABCB and Local Government regulations when considering the choice of, and the installation of these products.
This product is compliant with the Lead Free requirements of NCC Volume Three.
Due to ongoing Research and Development, specifications may change without notice.
Component specifications may change on some export models.
Refer to warranty statement for warranty details - www.enware.com.au/warranty.

Version 19 November 2026