Touch-Free Wall Sensor Lead Free Tap Auto Sense - Front of Wall Component - 230mm Spout - Mains/Battery 6 Lpm Laminar

Touch-free electronic sensor tap designed for general hand hygiene applications in healthcare and food preparation facilities. Requires lead-free in-wall component ENM620L or ENM621L. Not compatible with previous-generation in-wall components.



KEY FEATURES

- Active Sense operation. Place hands beneath the spout to activate water flow. Water automatically stops when hands are removed from the sensor range.
- Operates via low-voltage 9V mains power supply or 3V battery power.
- 230mm projection spout.
- Programmable flush cycle for stagnation management to help reduce the risk of bacterial growth. Usage monitoring and functional settings can be adjusted via the Oras App using Bluetooth connectivity.
- Compatible with AHFG Type A and Type B healthcare basins.
- Compatible with Smartflow Monitoring System for monitoring, reporting and water management.
- Durable, easy-clean chrome finish.
- Smooth-bore tubular spout designed to minimise areas where bacteria may accumulate.
- IP67-rated electrical connections.
- Removable plug allows access to the integral isolation valve without removing the spout or faceplate.
- Requires in-wall component ENM620L or ENM621L.
- Not compatible with previous-generation in-wall components.
- Lead-free construction.

PRODUCT CODE

ENMA-250	Touch-Free Wall Sensor Tap - Active Sense - Front of Wall - 230mm Spout

1300 369 273 | info@enware.com.au | enware.com.au

ENWARE
A WATTS Brand

Touch-Free Wall Sensor Lead Free Tap Auto Sense - Front of Wall Component - 230mm Spout - Mains/Battery 6 Lpm Laminar

TECHNICAL DATA

Colour	Chrome
Flow Rate	4.5 Lpm / 6 Lpm Laminar Flow
Sensor Range	250mm (Adjustable)
Maximum Flow Time	2 minutes (Adjustable)
Spout Size	230mm
Minimum Water Run Time	2 seconds (+/-1) after hands removed from sensor range (Factory default setting - adjustable)
Sensor Power Supply	9VDC / 3V battery

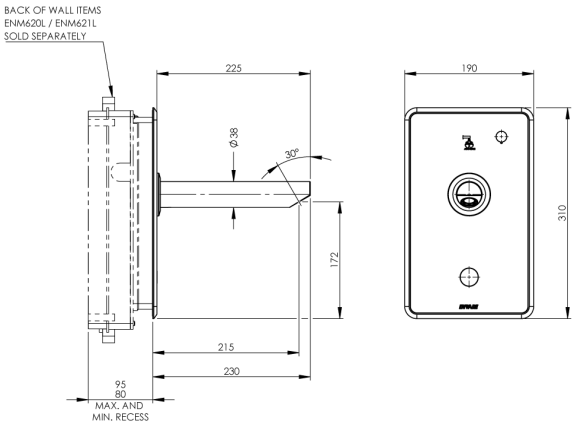

iN-WALL COMPONENT OPTIONS

ENM620L	Touch-Free Wall Sensor Tap - In-Wall - 3V Battery
ENM621L	Touch-Free Wall Sensor Tap - In-Wall - 9V Mains

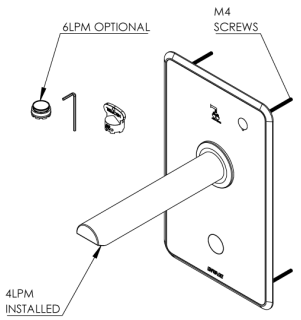

Products are to be installed in accordance with the Plumbing Code of Australia and AS/NZS3500.
Reference should also be made to the Australasian Health Facility Guidelines (AHFG), ABCB and Local Government regulations when considering the choice of, and the installation of these products.
This product is compliant with the Lead Free requirements of NCC Volume Three.
Due to ongoing Research and Development, specifications may change without notice.
Component specifications may change on some export models.
Refer to warranty statement for warranty details - www.enware.com.au/warranty.

1300 369 273 | info@enware.com.au | enware.com.au

ENWARE
A WATTS Brand