WMS1748
Installation Guide

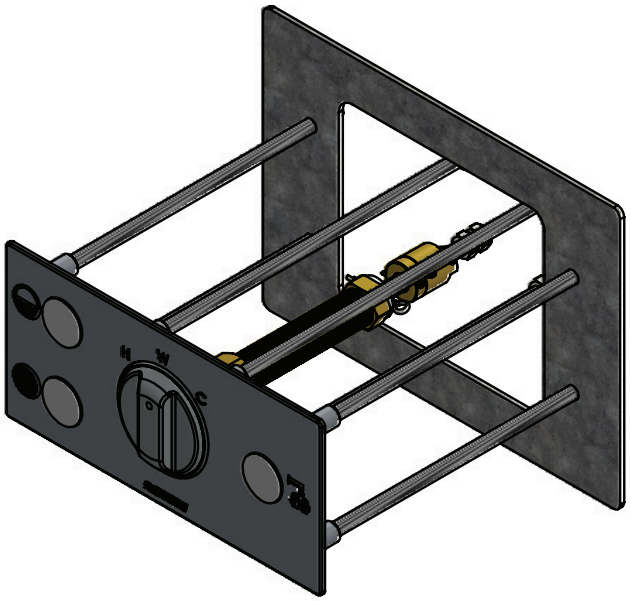

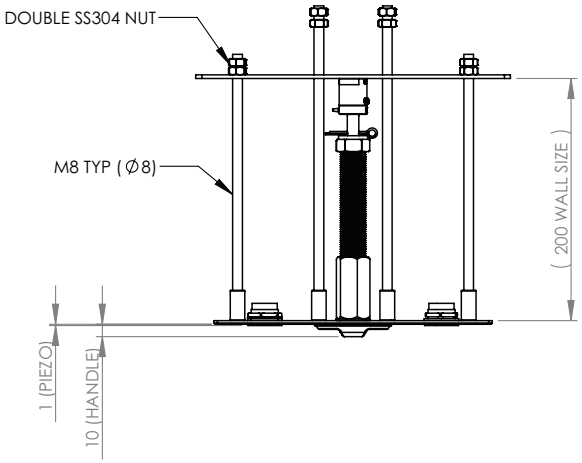

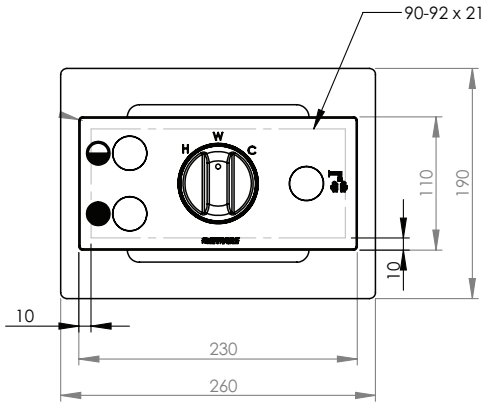

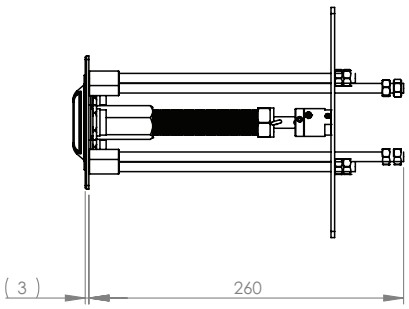

I00296_FEB 23

Call 1300 369 273
www.enware.com.au

Enware Australia Pty Limited
9 Endeavour Rd Caringbah NSW 2229 Australia
Ph: 02 8536 4000 info@enware.com.au

COMPONENTS

COMPONENTS

4 x booker rods long all thread M8
4 x booker rods short all thread M8
16 x Hex Nut M8
Back Plate Gal Steel
Face plate assembly
Mixer body assembly

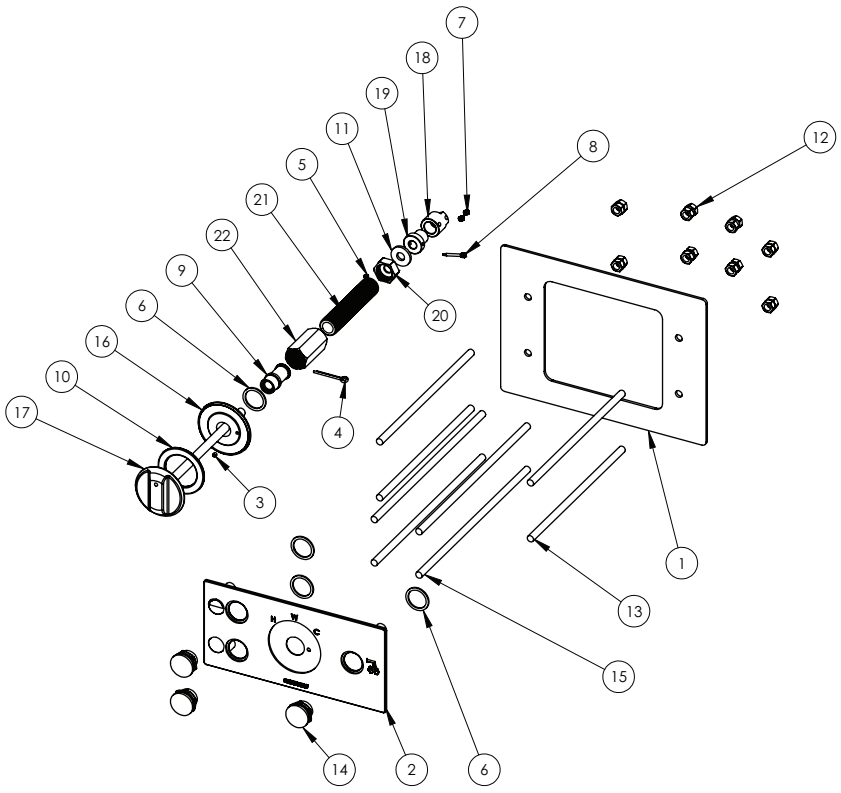

ITEM NO.	PART NUMBER	DESCRIPTION	QTY.
1	480684	DET EAL FASCIA BRACKET 260X190 HORIZONTAL	1
2	480764	DET EAL WC BSN 230 X 110 HORIZ 3 PIEZO OLD	1
3	671457	SCREW - M4 X 4 GRUB SS 304 ACADEMY	1
4	672387	PIN - SPLIT 3.2 x 25 SS	1
5	672460	SCREW-5-40 UNCx3/16 INC 304 SS SOCKET HD	1
6	672590	WASHER - RED FIBRE 28.5 X 23 X 1.5MM SBA	4
7	673360	SCREW GRUB M5 X 6 CONE SS304 DIN914	2
8	673480	M5 GRUB PIN LEVA	1
9	693051	SLEEVE - ANTI ROCK DET RECESS SEQ VIC	1
10	693081	ANTI ROCK BUSH EAL DET HANDLE	1
11	693583	WASHER- PLASTIC - DET618	1
12	792161	NUT HEX M8 304 SS	16
13	792162	ROD ALL THREAD M8 X 1M 304 SS	4
14	792476	SWITCH PIEZO 22MM PLAIN DC 300MM	3
15	792975	ROD ALL THREAD KIT SUIT EAL DET	1
16	880430	DRESS RING - DET RECESS SEQ VIC	1
17	880886	HANDLE CONCEALED EAL WITH CONTROL ROD	1
18	893295	SPLINE CONNECTOR ADJUSTABLE- EAL/DET/DLB	1
19	893296	ADAPTOR SPLINE TO SUIT NSP5546	1
20	893339	NUT - GAOL	1
21	893528	TAIL-103MM	1
22	894030	ADAPTOR HEX PIEZO M22 X 1	1

INSTALLATION PROCEDURE - FACE PLATE AND BODY

Note: images may not represent actual product.
Size, shape and configuration of components and bolt lengths may vary depending on the product model.

1. Screw threaded rods onto face plate. **SEE IMAGE 1**
   - 4 x short threaded rods onto sockets on four corners of face plate
   - 4 x long threaded rods onto the four sockets near the temperature adjuster
2. Fit front panel assembly through wall cavity, making sure threaded rods protrude into duct. **SEE IMAGE 2**

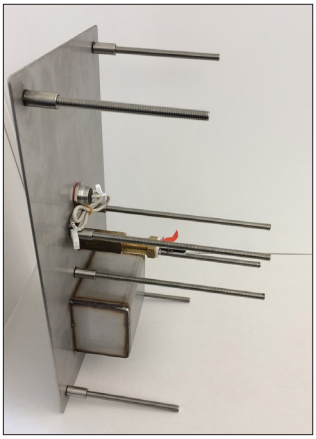

IMAGE 1

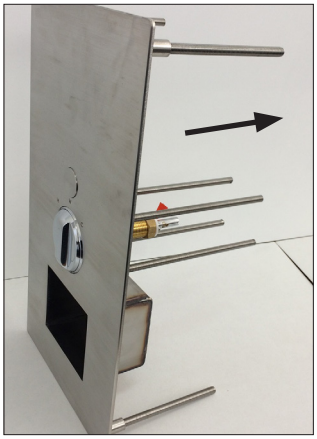

IMAGE 2

3. From within the duct, fit large gal back plate on, and secure the back plate with 4x M8 nuts. Fit another set of 4x M8 nuts and tighten with a spanner to lock the first 4 nuts into place. **SEE IMAGE 3**
4. Screw 4 x M8 nuts onto the 4x longer threaded rods in the duct. **SEE IMAGE 4**

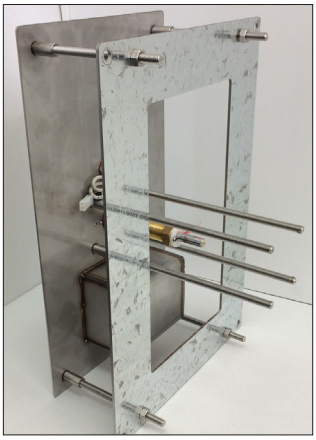

IMAGE 3

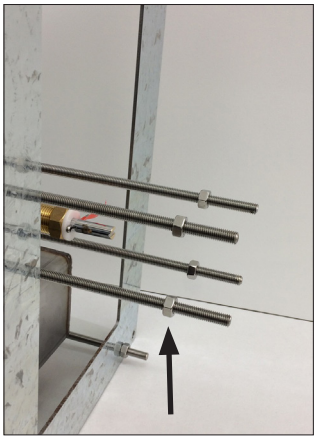

IMAGE 4

5. Unscrew and remove grub screw pin from spline adaptor nut using 2.5mm Allen key, and keep at hand. Check that there is a 2mm - 3mm gap between the spline connector and spline adaptor nut. **SEE IMAGE 5 and IMAGE 6**

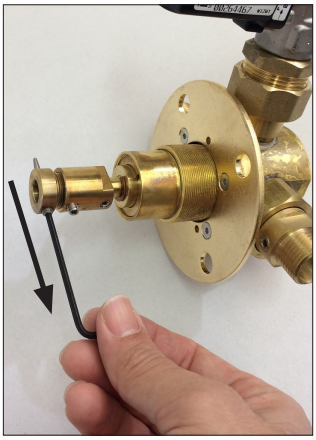

IMAGE 5

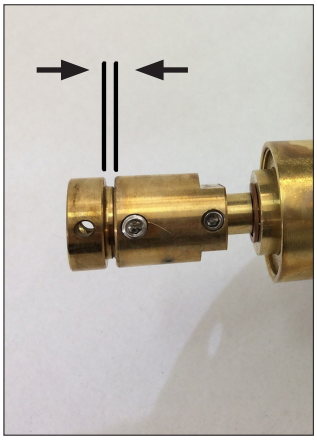

IMAGE 6

6. Take off red sticker label on the mixer body assembly, taking care not to lose the grub screw. **SEE IMAGE 7**

   DO NOT take off red sticker label that is on the face plate assembly **SEE IMAGE 8**

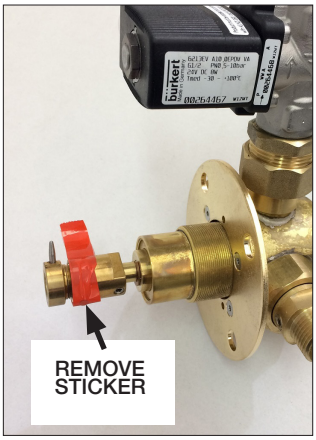

IMAGE 7



IMAGE 8

7. Fit mixer body assembly onto threaded rods, making sure to line up handle extension and spline adaptor. **SEE IMAGE 9**

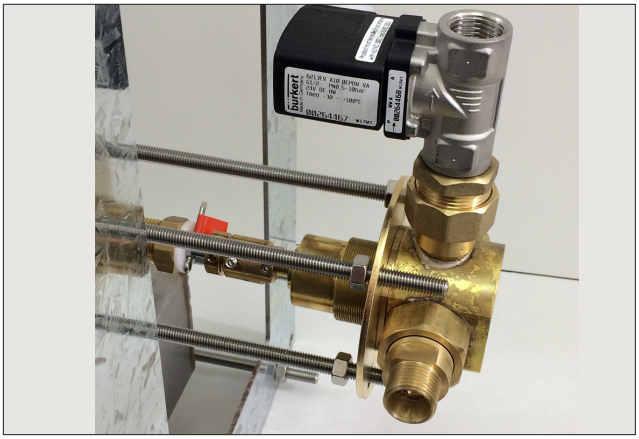

IMAGE 9

8. Align hole in handle extension with the hole in spline adaptor nut, and insert grub screw pin. Tighten grub screw pin with 2.5mm Allen key. **SEE IMAGE 10 and IMAGE 11**

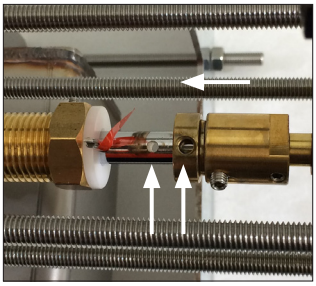

IMAGE 10

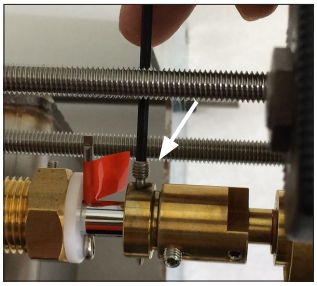

IMAGE 11

9. Position the front handle, so the indicator lines up with indicator marked “C” **SEE IMAGE 12**

10. From within the duct, turn the spline connector to full “COLD” position **SEE IMAGE 13**



IMAGE 12

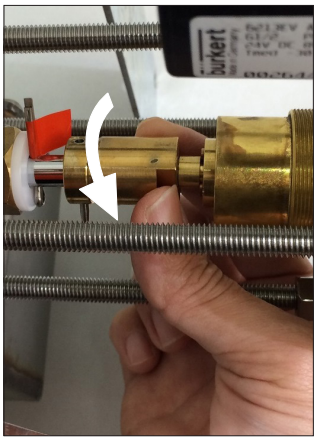

IMAGE 13

11. Tighten grub screw on the spline connector. **SEE IMAGE 14**

12. Test handle operation. Check that the handle can be turned to the full range between “H” and “C”. If not, loosen grub screw (IMAGE 14) and re-align handle (repeat steps 9 - 12).

13. Fit the last 4x M8 nuts to the threaded rod, make sure the body assembly is fitted square, and tighten the 4 x nuts with a spanner. **SEE IMAGE 15**

14. Proceed to connection of water supplies and outlet line from the solenoid. Thoroughly flush the water supply lines to ensure they are clear of any debris or contaminants that could enter the solenoid.
Any malfunction caused by debris in line would not be covered under warranty.

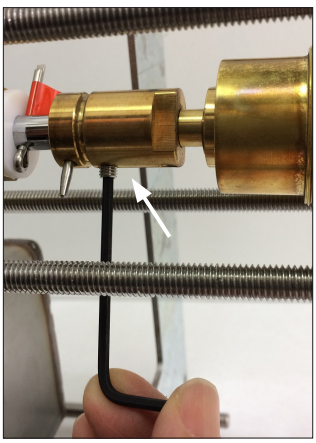

IMAGE 14

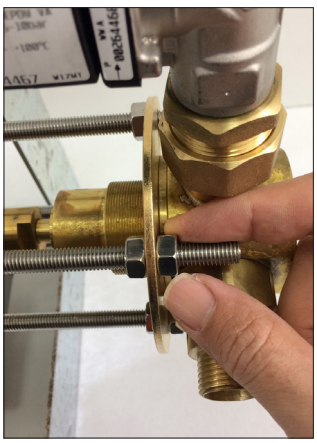

IMAGE 15